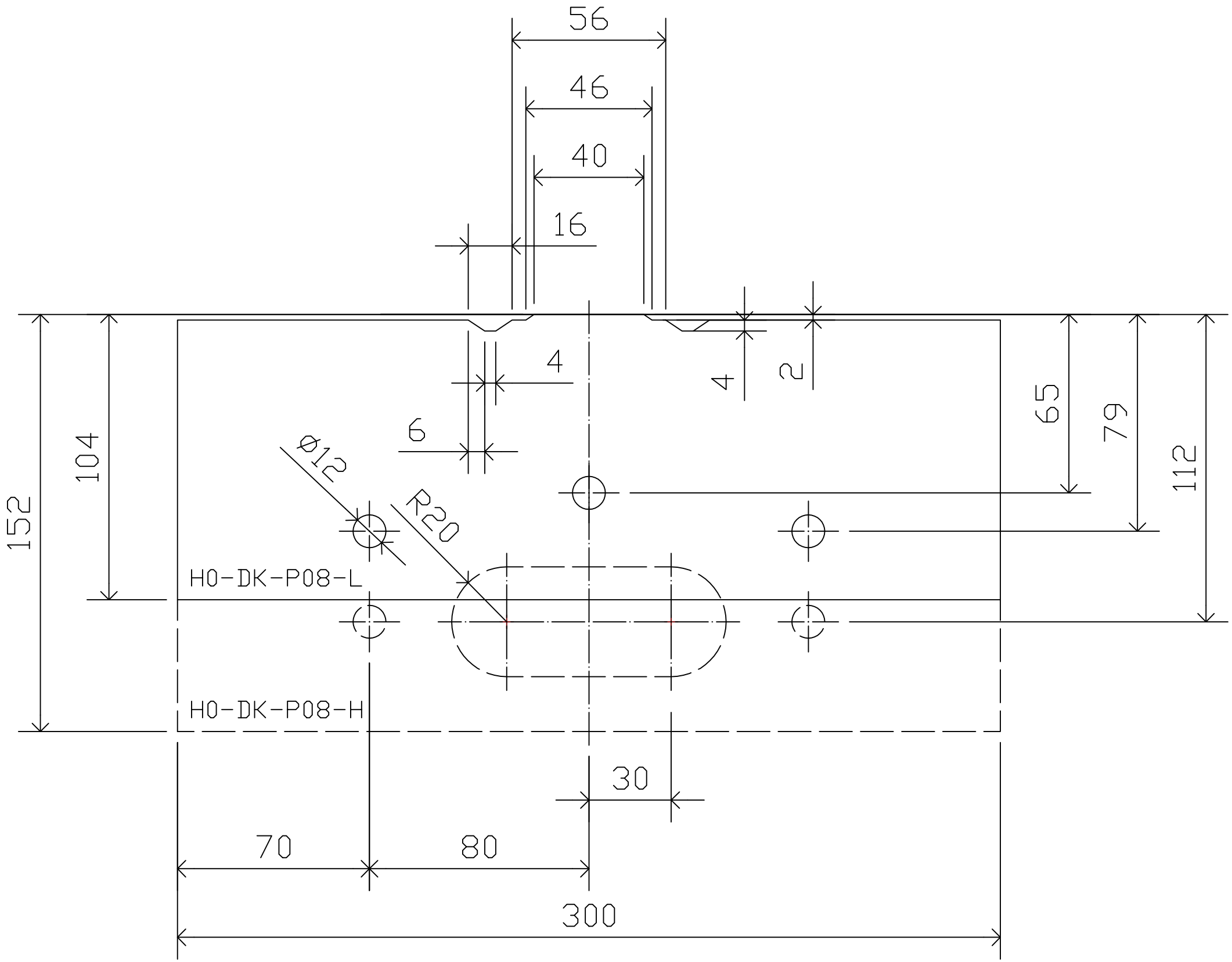
56
46
40
16
4
6
4
2
65
79
112
104
152
Ø12
R20
H0-DK-P08-L
H0-DK-P08-H
30
70
80
300